arXiv:2504.04869v1 [cs.CV] 7 Apr 2025

Content-Aware Transformer for All-in-one Image Restoration

Gang Wu, Junjun Jiang*, Kui Jiang and Xianming Liu
Faculty of Computing, Harbin Institute of Technology, Harbin 150001, China
{gwu, jiangjunjun, jiangkui, csxm}@hit.edu.cn

Abstract

*Image restoration has witnessed significant advancements with the development of deep learning models. Although Transformer architectures have progressed considerably in recent years, challenges remain—particularly the limited receptive field in window-based self-attention. In this work, we propose DSwinIR, a Deformable Sliding window Transformer for Image Restoration. DSwinIR introduces a novel deformable sliding window self-attention that adaptively adjusts receptive fields based on image content, enabling the attention mechanism to focus on important regions and enhance feature extraction aligned with salient features. Additionally, we introduce a central ensemble pattern to reduce the inclusion of irrelevant content within attention windows. In this way, the proposed DSwinIR model integrates the deformable sliding window Transformer and central ensemble pattern to amplify the strengths of both CNNs and Transformers while mitigating their limitations. Extensive experiments on various image restoration tasks demonstrate that DSwinIR achieves state-of-the-art performance. For example, in image deraining, compared to DRSformer on the SPA dataset, DSwinIR achieves a **0.66 dB** PSNR improvement. In all-in-one image restoration, compared to PromptIR, DSwinIR achieves over a **0.66 dB** and **1.04 dB** improvement on three-task and five-task settings, respectively. Pretrained models and code are available at our project[1].*

1. Introduction

Image restoration, a fundamental challenge in computer vision, aims to recover high-quality images from degraded observations. Deep learning approaches have revolutionized this field, delivering remarkable progress in specialized tasks such as image deraining, dehazing, and denoising [9, 22, 25]. Recently, the development of unified models capable of addressing multiple degradation types simultaneously has gained significant attention due to their practical value in real-world applications [29].

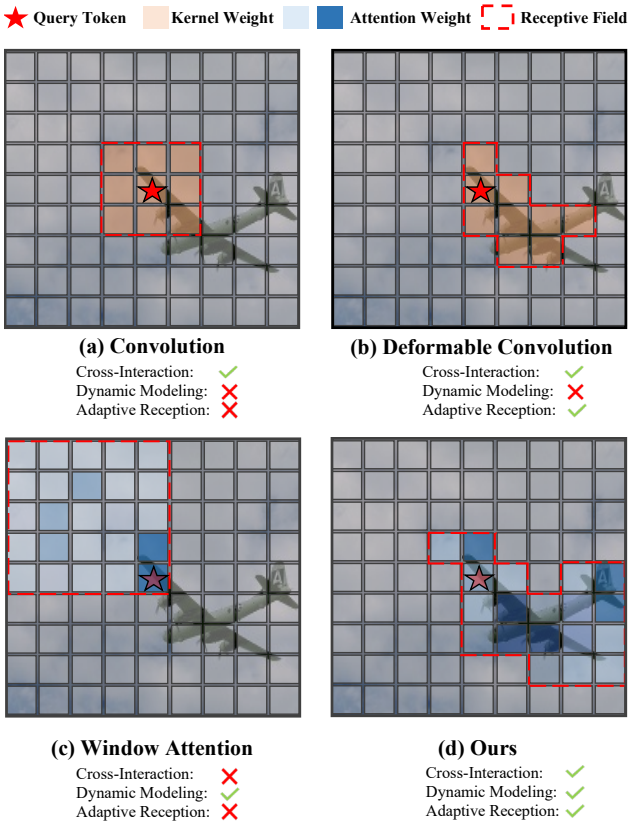

Figure 1. Comparative analysis of feature extraction mechanisms with an anchor token (marked by ⋆) as the reference point. (a) Vanilla convolution applies a fixed sampling pattern, leveraging neighborhood features. (b) Deformable convolution introduces adaptive sampling locations based on content, enabling more effective feature integration from relevant regions. (c) Window attention suffers from boundary constraints where anchor tokens near window edges (especially corners) have limited receptive fields, resulting in suboptimal feature extraction. (d) Our proposed Deformable Sliding Window (DSwin) extends window attention with token-centric paradigm and the content-adaptive reception field, ensuring robust feature aggregation for anchor tokens.

Transformer-based architectures have become the *de facto* models for image restoration owing to their dynamic

*Corresponding author
[1]https://github.com/Aitical/DSwinIR

and long-range modeling capabilities [2, 21, 41]. Particularly, Swin Transformer-based methods have achieved widespread adoption in image restoration [37, 51, 57, 59], where its efficient local attention mechanism achieves an exceptional balance between computational cost and restoration quality for dense prediction problems.. However, two challenges remain due to the limitations of local window partition: *insufficient interaction among different windows* and *limited receptive field*. Subsequent works have attempted to address these challenges by exploiting ingenious window design through cross-aggregation [11, 53], increasing window overlap [10], or employing sparse token selection strategy [8, 71]. While these ingenious window designs have indeed extended the performance of local attention, they are still based on fixed prior patterns, such as stacking horizontal and vertical windows to improve performance. These methods have not completely solved the two challenges brought by window partitioning.

In this work, we revisit the inductive biases of convolutional operations and introduce a novel Deformable Sliding Window (DSwin) attention mechanism, as illustrated in Fig.1. Inspired by the proven effectiveness of sliding patterns in convolutional neural networks, we transform the conventional window-first paradigm into a token-centric approach. This fundamental shift enables smoother cross-window interaction through overlapping receptive fields. To further enhance flexibility, we incorporate adaptive window partitioning inspired by deformable convolution[16]. Instead of fixed window regions, our DSwin attention dynamically reorganizes receptive fields based on content-aware offsets learned from center token features, resulting in more effective feature extraction tailored to image content. Building upon this foundation, we present the Deformable Sliding Window Transformer for Image Restoration (DSwinIR). A key component of our architecture is the Multiscale DSwin module (MSDSwin), which employs DSwin attention with varying kernel sizes across different attention heads to capture rich multiscale features—a crucial capability for effective image restoration. We conduct extensive evaluations across diverse image restoration tasks, spanning both all-in-one multiple degradation scenarios and specialized single-task settings. As demonstrated in Fig.2, DSwinIR delivers substantial improvements of 2.1 dB and 1.3 dB in synthetic and real-world deweathering tasks, respectively. Moreover, our approach establishes new state-of-the-art performance on three-task and five-task degradation benchmarks, outperforming previous methods by approximately 0.7 dB and 0.9 dB. For single-task restoration, DSwinIR surpasses the current leading method DRSformer[8] by 0.62 dB on the challenging real-world deraining SPA dataset [55].

Our main contributions can be summarized as follows:

- We propose a novel **Deformable Sliding Window Attention** mechanism that transforms window-based attention into a token-centric paradigm with adaptive, content-aware receptive fields, significantly enhancing feature extraction capabilities and inter-window interaction.
- We develop **DSwinIR**, a comprehensive image restoration framework built upon our deformable sliding window attention. The architecture incorporates a multiscale attention module that leverages varying kernel sizes across attention heads to capture rich hierarchical features essential for high-quality image restoration.
- Through extensive experiments across multiple image restoration tasks, including both all-in-one settings and specialized single-task scenarios, we demonstrate that DSwinIR consistently outperforms existing methods, establishing new state-of-the-art results on numerous benchmarks.

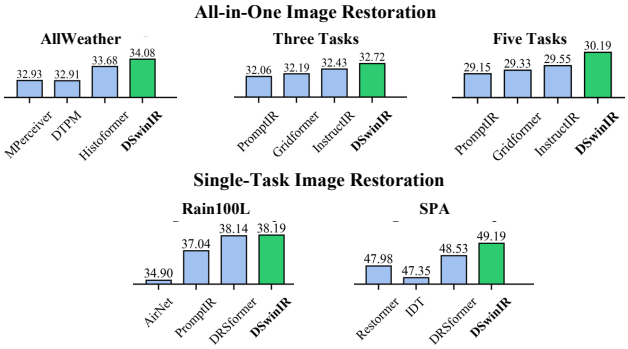

Figure 2. Quantitative comparison of the proposed DSwinIR against existing methods across diverse image restoration tasks, achieving consistent superior performance. All metrics are reported in PSNR (dB).

2. Related Work

Image restoration aims to reconstruct high-quality images from degraded observations. Significant progress has been made through Convolutional Neural Networks (CNNs) and Transformer-based architectures. We review relevant works and highlight how our contribution advances the field.

CNN-Based Approaches CNNs have been instrumental in image restoration due to their ability to learn hierarchical local features. Early models like SRCNN [20] and DnCNN [72] demonstrated the effectiveness of deep learning in super-resolution and denoising. Deeper architectures with residual connections, such as EDSR [38] and RDN [75], captured more complex patterns. Attention mechanisms were incorporated to enhance feature extraction in models like RCAN [74] and SAN [17]. However, traditional CNNs are limited by their fixed local receptive fields, restricting their capacity to model long-range dependencies and global context—crucial for handling complex degradations. To overcome this, methods like NLSN [45] and IGNN [76] introduced non-local modules to capture

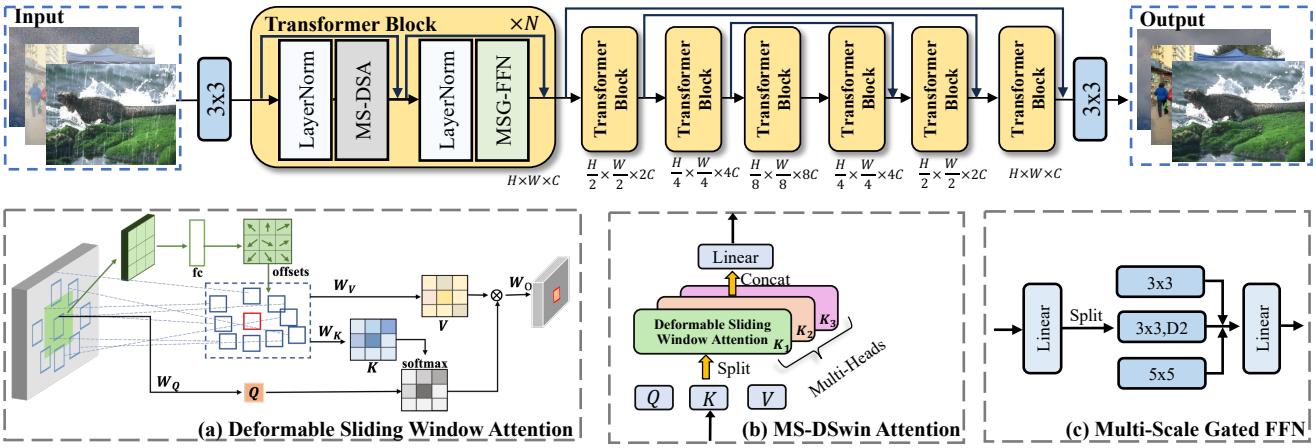

Figure 3. Overview of the proposed DSwinIR architecture, illustrating the integration of the DSwin module and the MSG-FFN within a U-shaped network. (a) Detail implementation of the proposed DSwin. (b) Illustration of the proposed multi-scale DSwin attention module. (c) The improved FFN with multi-scale feature extraction.

long-range dependencies, but these approaches are computationally intensive and may not scale well with image size. Deformable convolutions [16], utilized in AIRNet [32], adaptively adjust sampling locations to enlarge the receptive field but may still fall short in capturing global dependencies. Recent methods employing large kernel convolutions [19, 27, 42] aim to capture broader context efficiently but lack the dynamic and adaptive modeling capabilities of attention mechanisms.

Transformer-Based Approaches Transformers [21, 41] have revolutionized various fields by modeling long-range dependencies through self-attention. In image restoration, IPT [5] introduced a large-scale pretrained Transformer model, achieving state-of-the-art results. However, the quadratic computational complexity of standard self-attention with respect to input size makes it impractical for high-resolution images common in restoration tasks. To alleviate this, methods like SwinIR [37] adopted hierarchical architectures with local windowed attention to reduce computational load. While this improves efficiency, it reintroduces locality constraints, potentially limiting the ability to capture global context. Additionally, Transformers lack the inherent inductive biases for locality found in CNNs, essential for preserving fine details and textures, leading to suboptimal performance in tasks requiring precise local information. Some works have attempted to combine the strengths of CNNs and Transformers. For instance, PVT [56] and NAT [28] introduced pyramid structures and neighborhood attention to balance local and global feature extraction. Nonetheless, effectively integrating local inductive biases with global modeling remains challenging.

In this paper, we propose DSwinIR for image restoration, a novel attention mechanism for image restoration that distinguishes itself from existing approaches through its flexible cross-window interactions and adaptive receptive fields.

3. Method

In this section, we present DSwinIR, a novel architecture for image restoration that introduces the Deformable Sliding Window (DSwin) attention mechanism. We first provide an architectural overview, followed by detailed descriptions of our key components: the DSwin attention module and its multi-scale extension.

3.1. Overview

DSwinIR adopts a U-shaped encoder-decoder architecture with our proposed DSwin attention module and MSG-FFN as core components, as shown in Figure 3. The network is optimized using L1 loss between the restored output $\hat{y}$ and ground truth y:

$$\mathcal{L} = |\hat{y} - y|_1. \tag{1}$$

3.2. Deformable Sliding Window Attention

Preliminaries Given an input feature map $\mathbf{X} \in \mathbb{R}^{H\times W\times C}$, the self-attention is computed by comparing each query feature $\mathbf{x}_{i,j}$ with the features within its receptive field. To incorporate local context, we define the attention weights at position (i, j) as:

$$\alpha_{i,j}^{(u,v)} = \frac{\exp\left(\langle \mathbf{x}_{i,j}, \mathbf{x}_{i+u,j+v}\rangle\right)}{\sum_{(u',v')\in\mathcal{N}_k} \exp\left(\langle \mathbf{x}_{i,j}, \mathbf{x}_{i+u',j+v'}\rangle\right)}, \tag{2}$$

where $(u, v) \in \mathcal{N}_k$ denotes the local neighborhood defined by the kernel size k (such as the window size). The output at position (i, j) is computed as:

$$\mathbf{Y}_{i,j} = \sum_{(u,v)\in\mathcal{N}_k} \alpha_{i,j}^{(u,v)} \mathbf{x}_{i+u,j+v}. \tag{3}$$

This formulation limits the attention computation to a local neighborhood, similar to convolution, making it computationally efficient. Meanwhile, highlighting the crucial role of receptive field.

Incorporating Deformable Offsets To adaptively extend the receptive field, we introduce deformable offsets into the attention mechanism. Specifically, we learn offsets $\Delta\mathbf{p}_{i,j}^{(u,v)}$ for each position (i, j) and each location in the local neighborhood (u, v):

$$\Delta\mathbf{p}_{i,j}^{(u,v)} = f_\theta(\mathbf{x}_{i,j}), \tag{4}$$

where f_θ is a lightweight module that predicts the offsets for the sampling locations.

Leveraging the offsets, we sample the features at deformed positions: $\mathbf{x}_{i+u+\Delta ui,j^{(u,v)},\ j+v+\Delta v_{i,j}^{(u,v)}}$, where $\Delta u_{i,j}^{(u,v)}$ and $\Delta v_{i,j}^{(u,v)}$ are the components of $\Delta\mathbf{p}_{i,j}^{(u,v)}$. The output feature is ensemble with the adaptive selection tokens as:

$$\mathbf{Y}_{i,j} = \sum_{(u,v)\in\mathcal{N}_k} \alpha_{i,j}^{(u,v)} \mathbf{x}_{i+u+\Delta ui,j^{(u,v)},\ j+v+\Delta v_{i,j}^{(u,v)}}. \tag{5}$$

By introducing deformable offsets, we adaptively adjust the receptive field, allowing the attention to focus on relevant regions beyond the fixed local window regions.

3.3. Multi-Scale DSwin Attention Module

We futher extend the basic DSwin attention to a multi-scale variant (MS-DSwin). The key insight is to leverage different receptive fields within a single attention module.

Multi-Scale Design In MS-DSwin, we assign different kernel sizes to different attention heads within the multi-head attention mechanism. Formally, given H attention heads, each head $h \in 1, ..., H$ is associated with a unique kernel size k_h. The attention computation for head h can be expressed as:

$$\mathbf{Y}_{i,j}^h = \sum_{(u,v)\in\mathcal{N}_{k_h}} \alpha_{i,j,(u,v)}^h \mathbf{x}_{i+u+\Delta u_{i,j}^h,\ j+v+\Delta v_{i,j}^h}, \tag{6}$$

where $\mathcal{N}_{k_h}$ defines the kernel size k_h for head h, and $(\Delta u_{i,j}^h, \Delta v_{i,j}^h)$ are the learned deformable offsets specific to head h. The outputs from different heads are concatenated through a linear projection:

$$\mathbf{Y}_{i,j} = \mathbf{W}_o[\mathbf{Y}_{i,j}^1; \mathbf{Y}_{i,j}^2; ...; \mathbf{Y}_{i,j}^H], \tag{7}$$

where $\mathbf{W}_o \in \mathbb{R}^{C\times C}$ is the output projection matrix, and $[;]$ denotes concatenation.

3.4. Feed-Forward Network

Multi-Scale Guided Feed-Forward Network To enhance feature processing capabilities, we propose MSG-FFN, a multi-scale guided feed-forward network that extends the FFN design with parallel multi-scale convolution branches. Given an input feature map $\mathbf{X}$, MSG-FFN processes it as follows:

$$\begin{aligned}
[\mathbf{X}_1, \mathbf{X}_2, \mathbf{X}_2] &= \mathrm{Split}(\mathrm{Linear}_1(\mathbf{X})) \\
\mathbf{Y}_1 &= \mathrm{Conv}_{3\times3}(\mathbf{X}_1) \\
\mathbf{Y}_2 &= \mathrm{Conv}_{3\times3,d=2}(\mathbf{X}_2) \\
\mathbf{Y}_3 &= \mathrm{Conv}_{5\times5}(\mathbf{X}_3) \\
\mathbf{Z} &= \mathrm{Linear}_2(\mathrm{ReLU}([\mathbf{Y}_1; \mathbf{Y}_2; \mathbf{Y}_3])
\end{aligned} \tag{8}$$

where $\mathrm{Conv}_{k\times k}$ denotes convolution with kernel size k, $\mathrm{Conv}3\times3, d = 2$ represents dilated convolution with kernel size 3 and dilation rate 2.

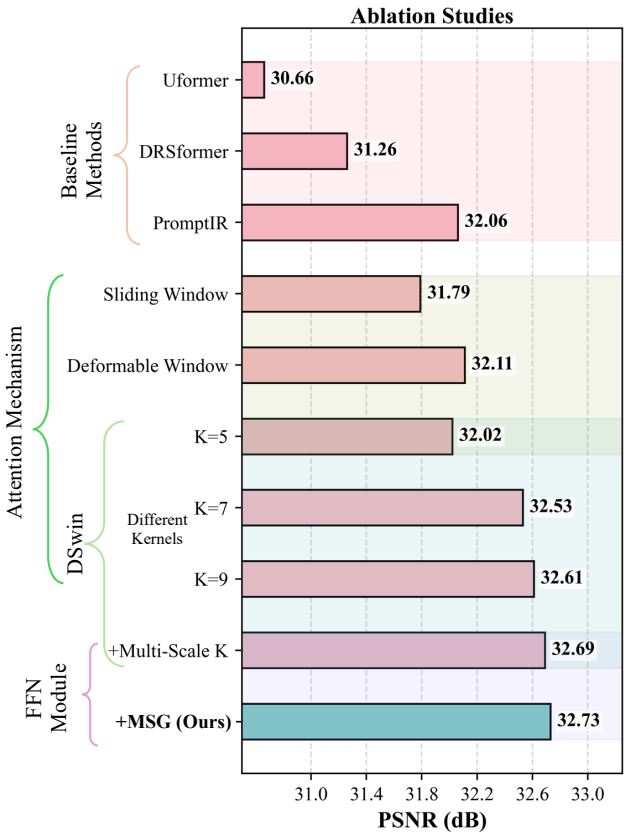

Figure 4. Ablation studies demonstrating the effectiveness of our key components. We evaluate (1) different attention mechanisms, showing improvements from Sliding Window (31.79 dB) and Deformable Window (32.11 dB) over baselines; (2) DSwin configurations with various kernel sizes (K=5,7,9) and Multi-scale enhancement (32.69 dB); and (3) FFN module with MSG enhancement, achieving the best performance (32.73 dB). All experiments report the average performance of three distinct degradation tasks with PSNR values in dB.

4. Experiments

4.1. Experiment Settings

To evaluate the effectiveness of our proposed DSwinIR model, we conduct experiments under two settings—All-in-

Table 1. Comprehensive evaluation of the proposed DSwinIR across diverse experimental settings in existing all-in-one image restoration research.

Experiment Settings	Tasks	Detail Degradation
setting 1: 3 distinct degradation tasks [32]	3	Rain, Haze, Noise
setting 2: 5 distinct degradation tasks [15]	5	Rain, Haze, Noise, Blur, Dark
setting 3: allweather [33]	3	Rain, Haze, Snow
setting 4: real-world deweathering [78]	3	Rain, Haze, Snow

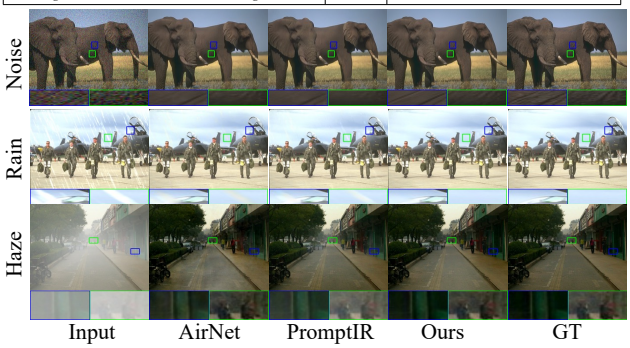

Figure 5. Visual comparison of restoration results across three degradation tasks: noise removal (top row), rain streak removal (middle row), and dehazing (bottom row). Zoom-in regions (shown in colored boxes) demonstrate that our method achieves superior detail preservation and degradation removal.

One and Single-task—following the protocols established in previous works [15, 33, 48, 78]. In the All-in-One setting, a unified model is trained to perform image restoration across multiple degradation types. As shown in Table 1, we provide a detailed evaluation across various All-in-One configurations, including three-task, five-task, all-weather, and real-world deweathering tasks. These results offer a comprehensive assessment of DSwinIR's capabilities. In contrast, the Single-task setting involves training separate models for each specific restoration task.

Implementation Detail Our DSwinIR is an end-to-end trainable model employing a four-level encoder-decoder architecture inspired by [57, 69]. The architecture utilizes varying numbers of Transformer blocks at each level—specifically, [4, 6, 6, 8] from level 1 to level 4. We train the model with a batch size of 8, using cropped image patches of size 128×128 pixels as input.

4.2. Ablation Studies

To thoroughly evaluate the effectiveness of our proposed model components, we conduct comprehensive ablation studies. As shown in Fig. 4 we systematically analyze three key aspects of our architecture: the attention mechanism, kernel sizes, and the FFN module design.

Attention Mechanism We first investigate different attention mechanisms to address the limitations of traditional window-based self-attention. Compared to the baseline Uformer (31.06 dB) and DRSformer (31.26 dB), both our proposed attention variants show notable improvements. The Sliding Window attention achieves 31.79 dB PSNR, while the Deformable Window attention further improves performance to 32.11 dB. This improvement demonstrates the effectiveness of our adaptive receptive field extension strategy. By combining the advantages of both approaches in our DSwin attention mechanism, we achieve even better performance, establishing a strong foundation for subsequent enhancements.

Impact of Kernel Sizes We conduct detailed experiments on kernel sizes within our DSwin attention mechanism to determine the optimal receptive field. Our results show a clear correlation between kernel size and performance: K=5 achieves 32.02 dB, while increasing to K=7 yields a significant improvement to 32.53 dB. Further enlarging to K=9 brings marginal gains (32.61 dB), suggesting diminishing returns for larger kernels. Notably, our proposed Multi-scale DSwin attention, which incorporates various kernel sizes for richer feature extraction, achieves superior performance (32.69 dB), demonstrating the benefits of multi-scale information processing.

FFN Module Enhancement Building upon the base FFN module from Uformer, which employs 3×3 depthwise convolution, we introduce a multi-scale design that combines 3×3 standard convolution, 3×3 dilated convolution (dilation rate=2), and 5×5 convolution. This enhanced FFN module (denoted as +MSG) achieves the best performance of 32.73 dB, representing a significant improvement over the baseline architecture and demonstrating the effectiveness of multi-scale operations in the FFN component. Through these ablation studies, we validate that each proposed component contributes meaningfully to the final performance. The combination of our DSwin attention mechanism, multi-scale kernel sizes, and enhanced FFN module results in the consistent improvement compared to baseline methods.

4.3. Multi-Task Image Restoration

We evaluate the performance of our proposed DSwinIR model on the challenging task of all-in-one image restoration, including the two settings: one involving three degradation types—deraining, dehazing, and denoising—and another encompassing five degradation types by adding deblurring and low-light enhancement.

Setting 1: Three Degradation Types Following the experimental setup in [32, 48], we focus on deraining, dehazing, and denoising tasks. For denoising, we train on a combination of BSD400 [3] and WED [43] datasets with synthetic Gaussian noise at levels $\sigma = 15, 25, 50$, and test on the BSD68 dataset. Deraining utilizes the Rain100L [61] dataset, and dehazing employs the SOTS [31] dataset. We compare DSwinIR with several state-of-the-art methods, including general-purpose models[6, 8, 14, 26, 68, 69], as well as specialized all-in-one models[12, 18, 32, 48, 62, 66].

Table 2. Quantitative comparisons for *Setting 1: three distinct degradation tasks*. Results of our proposed DSwinIR are in **bold**. * denotes the results are adopted from existing work [48, 73].

Type	Method	Venue	**Denoising** (CBSD68[44])			**Dehazing**	**Deraining**	**Average**
			$\sigma = 15$	$\sigma = 25$	$\sigma = 50$	SOTS [31]	Rain100L [61]	
General	MPRNet [68]	CVPR'21	33.27/0.920	30.76/0.871	27.29/0.761	28.00/0.958	33.86/0.958	30.63/0.894
	Restormer [69]	CVPR'22	33.72/0.930	30.67/0.865	27.63/0.792	27.78/0.958	33.78/0.958	30.75/0.901
	NAFNet [6]	ECCV'22	33.03/0.918	30.47/0.865	27.12/0.754	24.11/0.928	33.64/0.956	29.67/0.844
	FSNet* [14]	TPAMI'23	33.81/0.930	30.84/0.872	27.69/0.792	29.14/0.968	35.61/0.969	31.42/0.906
	DRSformer* [8]	CVPR'23	33.28/0.921	30.55/0.862	27.58/0.786	29.02/0.968	35.89/0.970	31.26/0.902
	MambaIR* [26]	ECCV'24	33.88/0.931	30.95/0.874	27.74/0.793	29.57/0.970	35.42/0.969	31.51/0.907
All-in-One	DL [23]	TPAMI'19	33.05/0.914	30.41/0.861	26.90/0.740	26.92/0.391	32.62/0.931	29.98/0.875
	AirNet [32]	CVPR'22	33.92/0.932	31.26/0.888	28.00/0.797	27.94/0.962	34.90/0.967	31.20/0.910
	IDR* [70]	CVPR'23	33.89/0.931	31.32/0.884	28.04/0.798	29.87/0.970	36.03/0.971	31.83/0.911
	PromptIR [48]	NeurIPS'23	33.98/0.933	31.31/0.888	28.06/0.799	30.58/0.974	36.37/0.972	32.06/0.913
	Gridformer* [18]	IJCV'24	33.93/0.931	31.37/0.887	28.11/0.801	30.37/0.970	37.15/0.972	32.19/0.912
	NDR [62]	TIP'24	34.01/0.932	31.36/0.887	28.10/0.798	28.64/0.962	35.42/0.969	31.51/0.910
	InstructIR [12]	ECCV'24	34.15/0.933	31.52/0.890	28.30/0.804	30.22/0.959	37.98/0.978	32.43/0.913
	TextualDegRemoval[66]	CVPR'24	34.01/0.933	31.39/0.890	28.18/0.802	31.63/0.980	37.58/0.979	32.63/0.917
	DSwinIR (Ours)	2025	**34.12/0.933**	**31.59/0.890**	**28.31/0.803**	**31.86/0.980**	**37.73/0.983**	**32.72/0.917**

Table 3. Quantitative comparisons for *Setting 2: five distinct degradation tasks*. Results of our proposed DSwinIR are in **bold**. * denotes the results are adopted from previous work [48, 62].

Type	Method	Venue	**Denoising**	**Dehazing**	**Deraining**	**Deblurring**	**Low-light**	**Average**
			CBSD68 [44]	SOTS [31]	Rain100L [61]	GoPro [46]	LOL [58]	
General	SwinIR [37]	ICCVW'21	30.59/0.868	21.50/0.891	30.78/0.923	24.52/0.773	17.81/0.723	25.04/0.835
	MIRNet-v2 [50]	TPAMI'22	30.97/0.881	24.03/0.927	33.89/0.954	26.30/0.799	21.52/0.815	27.34/0.875
	Restormer [69]	CVPR'22	31.49/0.884	24.09/0.927	34.81/0.962	27.22/0.829	20.41/0.806	27.60/0.881
	NAFNet [6]	ECCV'22	31.02/0.883	25.23/0.939	35.56/0.967	26.53/0.808	20.49/0.809	27.76/0.881
	DRSformer* [8]	CVPR'23	30.97/0.881	24.66/0.931	33.45/0.953	25.56/0.780	21.77/0.821	27.28/0.873
	Retinexformer* [4]	ICCV'23	30.84/0.880	24.81/0.933	32.68/0.940	25.09/0.779	22.76/0.834	27.24/0.873
	FSNet* [14]	TPAMI'23	31.33/0.883	25.53/0.943	36.07/0.968	28.32/0.869	22.29/0.829	28.71/0.898
	MambaIR* [26]	ECCV'24	31.41/0.884	25.81/0.944	36.55/0.971	28.61/0.875	22.49/0.832	28.97/0.901
All-in-One	DL [23]	TPAMI'19	23.09/0.745	20.54/0.826	21.96/0.762	19.86/0.672	19.83/0.712	21.05/0.743
	TAPE [39]	ECCV'22	30.18/0.855	22.16/0.861	29.67/0.904	24.47/0.763	18.97/0.621	25.09/0.801
	Transweather [54]	CVPR'22	29.00/0.841	21.32/0.885	29.43/0.905	25.12/0.757	21.21/0.792	25.22/0.836
	AirNet [32]	CVPR'22	30.91/0.882	21.04/0.884	32.98/0.951	24.35/0.781	18.18/0.735	25.49/0.846
	IDR [70]	CVPR'23	31.60/0.887	25.24/0.943	35.63/0.965	27.87/0.846	21.34/0.826	28.34/0.893
	PromptIR* [48]	NeurIPS'23	31.47/0.886	26.54/0.949	36.37/0.970	28.71/0.881	22.68/0.832	29.15/0.904
	Gridformer* [18]	IJCV'24	31.45/0.885	26.79/0.951	36.61/0.971	29.22/0.884	22.59/0.831	29.33/0.904
	InstructIR [12]	ECCV'24	31.40/0.887	27.10/0.956	36.84/0.973	29.40/0.886	23.00/0.836	29.55/0.907
	DSwinIR (Ours)	2025	**31.34/0.885**	**30.09/0.975**	**37.77/0.982**	**29.17/0.879**	**22.64/0.843**	**30.19/0.913**

Input TransWeather WGWS-Net WeatherDiff Histoformer **Ours** GT

Figure 6. Vision results of AllWeather datasets, from up to bottom is samples for outdoor-rain, snow and raindrop test data. Our DSwinIR achieves better Clarity even compared to the diffusion-based approaches.

Table 4. Quantitative comparisons for *4-task adverse weather removal*. Methods capable of handling multiple degradation tasks (all-in-one) are listed together, and their average performance is provided at the bottom. Missing values are denoted by '–'.

Type	Methods	Venue	**Snow100K-S** [40]		**Snow100K-L** [40]		**Outdoor-Rain** [33]		**RainDrop** [49]		Average	
			PSNR	SSIM	PSNR	SSIM	PSNR	SSIM	PSNR	SSIM	PSNR	SSIM
Task-Specific	SPANet [55]	CVPR'19	29.92	0.8260	23.70	0.7930	–	–	–	–	–	–
	DesnowNet [40]	TIP'18	32.33	0.9500	27.17	0.8983	–	–	–	–	–	–
	HRGAN [34]	CVPR'19	–	–	–	–	21.56	0.8550	–	–	–	–
	MPRNet [68]	CVPR'21	–	–	–	–	28.03	0.9192	–	–	–	–
	AttentiveGAN [49]	CVPR'18	–	–	–	–	–	–	31.59	0.9170	–	–
	IDT [59]	TIP'22	–	–	–	–	–	–	31.87	0.9313	–	–
	NAFNet [6]	ECCV'22	34.79	0.9497	30.06	0.9017	29.59	0.9027	–	–	–	–
	Restormer [69]	CVPR'22	36.01	0.9579	30.36	0.9068	30.03	0.9215	32.18	0.9408	–	–
All-in-One	All-in-One [35]	CVPR'20	–	–	28.33	0.8820	24.71	0.8980	31.12	0.9268	28.05	0.9023
	TransWeather [54]	CVPR'22	32.51	0.9341	29.31	0.8879	28.83	0.9000	30.17	0.9157	30.20	0.9094
	Chen *et al*. [7]	CVPR'22	34.42	0.9469	30.22	0.9071	29.27	0.9147	31.81	0.9309	31.43	0.9249
	WGWSNet [77]	CVPR'22	34.31	0.9460	30.16	0.9007	29.32	0.9207	32.38	0.9378	31.54	0.9263
	WeatherDiff$_{64}$ [47]	TPAMI'23	35.83	0.9566	30.09	0.9041	29.64	0.9312	30.71	0.9312	31.57	0.9308
	WeatherDiff$_{128}$ [47]	TPAMI'23	35.02	0.9516	29.58	0.8941	29.72	0.9216	29.66	0.9225	31.00	0.9225
	AWRCP [64]	ICCV'23	36.92	0.9652	31.92	0.9341	31.39	0.9329	31.93	0.9314	33.04	0.9409
	GridFormer [18]	IJCV'24	37.46	0.9640	31.71	0.9231	31.87	0.9335	32.39	0.9362	33.36	0.9392
	MPerceiver [1]	CVPR'24	36.23	0.9571	31.02	0.9164	31.25	0.9246	33.21	0.9294	32.93	0.9319
	DTPM [65]	CVPR'24	37.01	0.9663	30.92	0.9174	30.99	0.9340	32.72	0.9440	32.91	0.9404
	Histoformer [52]	ECCV'24	37.41	0.9656	32.16	0.9261	32.08	0.9389	33.06	0.9441	33.68	0.9437
	DSwinIR (Ours)	2025	**38.11**	**0.9683**	**32.58**	**0.9312**	**32.76**	**0.9502**	**32.88**	**0.9474**	**34.08**	**0.9493**

As shown in Table 2, DSwinIR consistently outperforms existing methods across all tasks. One can find that significant gains are obtained, particularly in challenging scenarios such as high-level noise denoising and severe haze removal. Notably, compared to recent multimodal prior-based methods like InstructIR[12] and TextualDegRemoval[66], our method still demonstrates competitive or superior performance despite using only vision modality. For instance, on the challenging SOTS dehazing dataset, DSwinIR achieves 31.86 dB PSNR, surpassing TextualDegRemoval (31.63 dB) which leverages additional language priors. This suggests that our architectural improvements in attention mechanism and multi-scale feature extraction can effectively compensate for the lack of extra modality priors.

The qualitative results in Figure 5 further demonstrate DSwinIR's effectiveness across different degradation types. For the high-noise case, our method better preserves the textural details of the elephant while removing noise. In the rain removal example, DSwinIR more effectively eliminates rain streaks while maintaining the clarity of moving objects. The dehazing case shows our method's superior ability in restoring both global contrast and local details under severe haze conditions.

Setting 2: Five Degradation Types To further evaluate the generalization capability of our DSwinIR model, we extend the all-in-one image restoration setting to include five degradation types by adding deblurring and low-light enhancement tasks, following [70]. Specifically, we utilize the GoPro [46] dataset for deblurring and the LOL [58] dataset for low-light enhancement, in addition to the previously introduced *setting 1*. We compare DSwinIR with several state-of-the-art methods[12, 18, 32, 48, 70] under this unified framework, where all models are trained on a combined dataset containing images from all five degradation types. The quantitative results are presented in Table 3.

Our DSwinIR model demonstrates superior performance across most tasks, particularly excelling in dehazing and deraining. Notably, DSwinIR shows significant improvements in dehazing, indicating its strong capability in restoring images affected by haze. Although its performance on the low-light enhancement task is slightly lower compared to some methods, DSwinIR maintains competitive results across all tasks and achieves the highest average scores among the compared methods. These results highlight DSwinIR's ability to effectively handle a diverse set of degradations within a single model without compromising performance on individual tasks. The consistent improvements across multiple tasks suggest that DSwinIR successfully captures both shared and task-specific features, benefiting from the joint learning of different restoration tasks.

4.4. Deweathering Tasks

We further evaluate our DSwinIR model on deweathering tasks, which involve removing weather-related artifacts such as rain, snow, and fog. Following the experimental setups in [54] and [78], we assess the performance of our approach on both synthetic and real-world datasets.

Synthetic Deweathering Tasks We test the capability of DSwinIR on three challenging deweathering tasks: snow

Table 5. Quantitative comparison on *setting 4: real-world deweathering* following [78]. Results of our DSwinIR is in **bold**.

Methods	Rain on SPA+		Snow on RealSnow		Haze on REVIDE		Average	
	PSNR	SSIM	PSNR	SSIM	PSNR	SSIM	PSNR	SSIM
Chen *et al.* [7]	37.32	0.97	29.37	0.88	20.10	0.85	28.93	0.90
TransWeather [54]	33.64	0.93	29.16	0.82	17.33	0.82	26.71	0.86
WGWS [78]	38.94	0.98	33.64	0.93	29.46	0.85	34.01	0.92
DSwinIR (Ours)	**40.60**	**0.98**	**33.80**	**0.93**	**30.14**	**0.89**	**34.85**	**0.93**

removal, rain streak and fog removal, and raindrop removal. The training data, termed "AllWeather," comprises images from the Snow100K [40], Raindrop [49], and Outdoor-Rain [33] datasets. We compare DSwinIR with state-of-the-art methods[18, 47, 54, 65, 73, 78].

As shown in Table 4, DSwinIR consistently outperforms existing methods across all datasets. The significant performance gains over multiple weather degradation demonstrate the effectiveness of DSwinIR in handling diverse weather-related degradations. To further illustrate the qualitative improvements, we present visual comparisons in Figure 6. DSwinIR produces clearer and more natural images, effectively removing weather artifacts while preserving fine details and textures. For instance, DSwinIR eliminates snowflakes without introducing blurring or color distortion. In rain and fog removal, it recovers sharp edges and vibrant colors, enhancing the overall image quality.

Setting 4: Real-World Deweathering To evaluate the effectiveness of DSwinIR in real-world conditions, we assess our model on multiple real-world datasets following the setup in [78]. Specifically, we test on SPA+ [55] for deraining, RealSnow for desnowing, and REVIDE for dehazing. We compare DSwinIR with Chen et al. [7], TransWeather [54], and WGWSNet [78].

As presented in Table 5, DSwinIR achieves superior performance across all datasets. Notably, it surpasses WGWS-Net, which previously reported strong results in similar settings. These improvements demonstrate DSwinIR's robust capability to handle various weather-induced degradations in real-world scenarios.

4.5. Single-Task Image

Image Deraining We evaluate the performance of our proposed DSwinIR model on the image deraining task, which aims to remove rain streaks from images to restore clear scenes—an essential requirement for outdoor vision systems. We conduct experiments on two benchmark datasets: Rain100L [60], which consists of synthetic rainy images with light rain streaks, and SPA-Data [55], a real-world dataset with complex rain conditions that presents a challenging benchmark for deraining methods.

As presented in Table 6, our DSwinIR model achieves a PSNR of **38.19 dB** and an SSIM of **0.984**, outperforming all compared methods and indicating its effectiveness in removing light rain streaks from synthetic images. Notably, DSwinIR surpasses the previous best method

Table 6. Quantitative comparison of different methods on the single image deraining task, evaluated on Rain100L [60] and SPA-Data [55]. The results are reported in terms of PSNR/SSIM. The best results are highlighted in **bold**.

Method	Dataset Rain100L [60]	Method	Dataset SPA [55]
UMR [63]	32.39/0.921	MSPFN [30]	43.43/0.9843
MSPFN [30]	33.50/0.948	MPRNet [68]	43.64/0.9844
LPNet [24]	33.61/0.958	DualGCN [36]	44.18/0.9902
Restormer [69]	36.74/0.978	SPDNet [67]	43.20/0.9871
DRSformer [8]	38.14/0.983	Uformer [57]	46.13/0.9913
IRNext [13]	38.14/0.972	Restormer [69]	47.98/0.9921
AirNet [32]	34.90/0.977	IDT [59]	47.35/0.9930
PromptIR [48]	37.04/0.979	DRSformer[8]	48.53/0.9924
DSwinIR (Ours)	**38.19/0.984**	**DSwinIR (Ours)**	**49.19/0.9938**

DRSFormer[8] by 0.05 dB in PSNR. On the real-world SPA dataset, DSwinIR attains a significant improvement, achieving a PSNR of **49.19 dB** and an SSIM of **0.9938**, outperforming all existing methods. Compared to the previous best method DRSFormer[8], DSwinIR achieves an improvement of 0.66 dB in PSNR and 0.0014 in SSIM. These results demonstrate the strong capability of DSwinIR in handling complex rain conditions in real-world images.

4.6. Limitation

Despite DSwinIR's strong performance across multiple restoration tasks, two key limitations remain. First, our improvements for low-light enhancement are less impressive than for other tasks (as shown in Table 3), indicating the need for task-specific adaptations such as task prompts that we haven't yet explored. Second, while DSwinIR demonstrates good multi-task capabilities, it currently requires complete retraining for different configurations. Future work should focus on enhancing transferability through few-shot or zero-shot learning approaches to expand practical applications while reducing computational costs.

5. Conclusion

We presented the Deformable Sliding Window (DSwin) attention mechanism to overcome two critical limitations of traditional window-based self-attention: limited cross-window interaction and restricted receptive fields. By combining deformable sampling with multi-scale processing, DSwin enables adaptive feature aggregation across various spatial ranges, effectively capturing both local and global image contexts. Our resulting Deformable Sliding Window Transformer (DSwinIR) consistently outperforms state-of-the-art methods across diverse image restoration tasks, as demonstrated through extensive experiments. We believe our proposed operator advances transformer-based image restoration and will inspire further developments in the field.

References

[1] Yuang Ai, Huaibo Huang, Xiaoqiang Zhou, Jiexiang Wang, and Ran He. Multimodal prompt perceiver: Empower adaptiveness, generalizability and fidelity for all-in-one image restoration. In *CVPR*, pages 25432–25444, 2024. 7

[2] Anas M. Ali, Bilel Benjdira, Anis Koubaa, Walid El Shafai, Zahid Khan, and Wadii Boulila. Vision transformers in image restoration: A survey. *Sensors*, 23(5):2385, 2023. 2

[3] Pablo Arbelaez, Michael Maire, Charless Fowlkes, and Jitendra Malik. Contour detection and hierarchical image segmentation. *IEEE Trans. Pattern Anal. Mach. Intell.*, 33(5): 898–916, 2011-05. 5

[4] Yuanhao Cai, Hao Bian, Jing Lin, Haoqian Wang, Radu Timofte, and Yulun Zhang. Retinexformer: One-stage retinex-based transformer for low-light image enhancement. In *IEEE/CVF International Conference on Computer Vision (ICCV)*, pages 12470–12479, 2023. 6

[5] Hanting Chen, Yunhe Wang, Tianyu Guo, Chang Xu, Yiping Deng, Zhenhua Liu, Siwei Ma, Chunjing Xu, Chao Xu, and Wen Gao. Pre-trained image processing transformer. In *IEEE/CVF Conference on Computer Vision and Pattern Recognition (CVPR)*, pages 12299–12310, 2021. 3

[6] Liangyu Chen, Xiaojie Chu, Xiangyu Zhang, and Jian Sun. Simple baselines for image restoration. In *European Conference on Computer Vision (ECCV)*, pages 17–33, 2022. 5, 6, 7

[7] Wei-Ting Chen, Zhi-Kai Huang, Cheng-Che Tsai, Hao-Hsiang Yang, Jian-Jiun Ding, and Sy-Yen Kuo. Learning multiple adverse weather removal via two-stage knowledge learning and multi-contrastive regularization: Toward a unified model. In *IEEE/CVF Conference on Computer Vision and Pattern Recognition (CVPR)*, pages 17632–17641, 2022. 7, 8

[8] Xiang Chen, Hao Li, Mingqiang Li, and Jinshan Pan. Learning a sparse transformer network for effective image deraining. In *IEEE/CVF Conference on Computer Vision and Pattern Recognition (CVPR)*, pages 5896–5905, 2023. 2, 5, 6, 8

[9] Xiang Chen, Jinshan Pan, Jiangxin Dong, and Jinhui Tang. Towards unified deep image deraining: A survey and A new benchmark. *CoRR*, abs/2310.03535, 2023. 1

[10] Xiangyu Chen, Xintao Wang, Jiantao Zhou, Yu Qiao, and Chao Dong. Activating more pixels in image super-resolution transformer. In *IEEE/CVF Conference on Computer Vision and Pattern Recognition (CVPR)*, pages 22367–22377, 2023. 2

[11] Zheng Chen, Yulun Zhang, Jinjin Gu, Yongbing Zhang, Linghe Kong, and Xin Yuan. Cross aggregation transformer for image restoration. In *Advances in Neural Information Processing Systems (NeurIPS)*, 2022. 2

[12] Marcos V Conde, Gregor Geigle, and Radu Timofte. High-quality image restoration following human instructions. In *European Conference on Computer Vision (ECCV)*, pages 1–12, 2024. 5, 6, 7

[13] Yuning Cui, Wenqi Ren, Sining Yang, Xiaochun Cao, and Alois Knoll. IRNeXt: Rethinking convolutional network design for image restoration. In *Proceedings of International Conference on Machine Learning (ICML)*, pages 6545–6564, 2023. 8

[14] Yuning Cui, Wenqi Ren, Xiaochun Cao, and Alois Knoll. Image restoration via frequency selection. *IEEE Trans. Pattern Anal. Mach. Intell.*, 46(2):1093–1108, 2024. 5, 6

[15] Yuning Cui, Syed Waqas Zamir, Salman H. Khan, Alois Knoll, Mubarak Shah, and Fahad Shahbaz Khan. Adair: Adaptive all-in-one image restoration via frequency mining and modulation. *CoRR*, abs/2403.14614, 2024. 5

[16] Jifeng Dai, Haozhi Qi, Yuwen Xiong, Yi Li, Guodong Zhang, Han Hu, and Yichen Wei. Deformable convolutional networks. In *IEEE/CVF International Conference on Computer Vision (ICCV)*, pages 764–773. IEEE Computer Society, 2017. 2, 3

[17] Tao Dai, Jianrui Cai, Yongbing Zhang, Shu-Tao Xia, and Lei Zhang. Second-order attention network for single image super-resolution. In *2019 IEEE/CVF Conference on Computer Vision and Pattern Recognition (CVPR)*, pages 11057–11066, 2019. 2

[18] Gridformer: Residual dense transformer with grid structure for image restoration in adverse weather conditions. Gridformer: Residual dense transformer with grid structure for image restoration in adverse weather conditions. *Int. J. Comput. Vis.*, pages 1–23, 2024. 5, 6, 7, 8

[19] Xiaohan Ding, Xiangyu Zhang, Jungong Han, and Guiguang Ding. Scaling up your kernels to 31×31: Revisiting large kernel design in cnns. In *IEEE/CVF Conference on Computer Vision and Pattern Recognition (CVPR)*, pages 11953–11965, 2022. 3

[20] Chao Dong, Chen Change Loy, Kaiming He, and Xiaoou Tang. Image super-resolution using deep convolutional networks. *IEEE Transactions on Pattern Analysis and Machine Intelligence*, 38(2):295–307, 2016. 2

[21] Alexey Dosovitskiy, Lucas Beyer, Alexander Kolesnikov, Dirk Weissenborn, Xiaohua Zhai, Thomas Unterthiner, Mostafa Dehghani, Matthias Minderer, Georg Heigold, Sylvain Gelly, Jakob Uszkoreit, and Neil Houlsby. An image is worth 16x16 words: Transformers for image recognition at scale. In *Proceedings of International Conference on Learning Representations (ICLR)*, 2021. 2, 3

[22] Michael Elad, Bahjat Kawar, and Gregory Vaksman. Image denoising: The deep learning revolution and beyond - A survey paper. *SIAM J. Imaging Sci.*, 16(3):1594–1654, 2023. 1

[23] Qingnan Fan, Dongdong Chen, Lu Yuan, Gang Hua, Nenghai Yu, and Baoquan Chen. A general decoupled learning framework for parameterized image operators. *IEEE Trans. Pattern Anal. Mach. Intell.*, 43(1):33–47, 2021. 6

[24] Hongyun Gao, Xin Tao, Xiaoyong Shen, and Jiaya Jia. Dynamic scene deblurring with parameter selective sharing and nested skip connections. In *Proceedings of the IEEE Conference on Computer Vision and Pattern Recognition (CVPR)*, pages 3848–3856, 2019. 8

[25] Jie Gui, Xiaofeng Cong, Yuan Cao, Wenqi Ren, Jun Zhang, Jing Zhang, Jiuxin Cao, and Dacheng Tao. A comprehensive survey and taxonomy on single image dehazing based on deep learning. *ACM Comput. Surv.*, 55(13s), 2023. 1

[26] Hang Guo, Jinmin Li, Tao Dai, Zhihao Ouyang, Xudong Ren, and Shu-Tao Xia. Mambair: A simple baseline for image restoration with state-space model. In *European Conference on Computer Vision (ECCV)*, pages 222–241, 2024. 5, 6

[27] Meng-Hao Guo, Cheng-Ze Lu, Zheng-Ning Liu, Ming-Ming Cheng, and Shi-Min Hu. Visual attention network. *Comput. Vis. Media*, 9(4):733–752, 2023. 3

[28] Ali Hassani, Steven Walton, Jiachen Li, Shen Li, and Humphrey Shi. Neighborhood attention transformer. In *IEEE/CVF Conference on Computer Vision and Pattern Recognition (CVPR)*, pages 6185–6194, 2023. 3

[29] Junjun Jiang, Zengyuan Zuo, Gang Wu, Kui Jiang, and Xianming Liu. A survey on all-in-one image restoration: Taxonomy, evaluation and future trends. *CoRR*, abs/2410.15067, 2024. 1

[30] Kui Jiang, Zhongyuan Wang, Peng Yi, Chen Chen, Baojin Huang, Yimin Luo, Jiayi Ma, and Junjun Jiang. Multi-scale progressive fusion network for single image deraining. In *IEEE/CVF Conference on Computer Vision and Pattern Recognition (CVPR)*, pages 8346–8355, 2020. 8

[31] Boyi Li, Wenqi Ren, Dengpan Fu, Dacheng Tao, Dan Feng, Wenjun Zeng, and Zhangyang Wang. Benchmarking single-image dehazing and beyond. *IEEE Transactions on Image Processing*, 28(1):492–505, 2019. 5, 6

[32] Boyun Li, Xiao Liu, Peng Hu, Zhongqin Wu, Jiancheng Lv, and Xi Peng. All-in-one image restoration for unknown corruption. In *IEEE/CVF Conference on Computer Vision and Pattern Recognition (CVPR)*, pages 17431–17441, 2022. 3, 5, 6, 7, 8

[33] Ruoteng Li, Loong-Fah Cheong, and Robby T. Tan. Heavy rain image restoration: Integrating physics model and conditional adversarial learning. In *Proceedings of the IEEE Conference on Computer Vision and Pattern Recognition (CVPR)*, pages 1633–1642, 2019. 5, 7, 8

[34] Ruoteng Li, Loong-Fah Cheong, and Robby T Tan. Heavy rain image restoration: Integrating physics model and conditional adversarial learning. In *IEEE/CVF Conference on Computer Vision and Pattern Recognition (CVPR)*, pages 1633–1642, 2019. 7

[35] Ruoteng Li, Robby T Tan, and Loong-Fah Cheong. All in one bad weather removal using architectural search. In *IEEE/CVF Conference on Computer Vision and Pattern Recognition (CVPR)*, pages 3175–3185, 2020. 7

[36] Ruifan Li, Hao Chen, Fangxiang Feng, Zhanyu Ma, Xiaojie Wang, and Eduard Hovy. Dual graph convolutional networks for aspect-based sentiment analysis. In *Proceedings of the 59th Annual Meeting of the Association for Computational Linguistics and the 11th International Joint Conference on Natural Language Processing (Volume 1: Long Papers)*, pages 6319–6329, 2021. 8

[37] Jingyun Liang, Jiezhang Cao, Guolei Sun, Kai Zhang, Luc Van Gool, and Radu Timofte. SwinIR: Image restoration using swin transformer. In *IEEE/CVF International Conference on Computer Vision Workshops (ICCVW)*, pages 1833–1844, 2021. 2, 3, 6

[38] Bee Lim, Sanghyun Son, Heewon Kim, Seungjun Nah, and Kyoung Mu Lee. Enhanced deep residual networks for single image super-resolution. In *IEEE/CVF Conference on Computer Vision and Pattern Recognition Workshops (CVPRW)*, pages 1132–1140, 2017. 2

[39] Lin Liu, Lingxi Xie, Xiaopeng Zhang, Shanxin Yuan, Xiangyu Chen, Wengang Zhou, Houqiang Li, and Qi Tian. TAPE: task-agnostic prior embedding for image restoration. In *European Conference on Computer Vision (ECCV)*, pages 447–464, 2022. 6

[40] Yun-Fu Liu, Da-Wei Jaw, Shih-Chia Huang, and Jenq-Neng Hwang. Desnownet: Context-aware deep network for snow removal. *IEEE Trans. Image Process.*, 27(6):3064–3073, 2018. 7, 8

[41] Ze Liu, Yutong Lin, Yue Cao, Han Hu, Yixuan Wei, Zheng Zhang, Stephen Lin, and Baining Guo. Swin transformer: Hierarchical vision transformer using shifted windows. In *IEEE/CVF International Conference on Computer Vision (ICCV)*, pages 9992–10002, 2021. 2, 3

[42] Zhuang Liu, Hanzi Mao, Chao-Yuan Wu, Christoph Feichtenhofer, Trevor Darrell, and Saining Xie. A convnet for the 2020s. In *IEEE/CVF Conference on Computer Vision and Pattern Recognition (CVPR)*, pages 11966–11976, 2022. 3

[43] Kede Ma, Zhengfang Duanmu, Qingbo Wu, Zhou Wang, Hongwei Yong, Hongliang Li, and Lei Zhang. Waterloo exploration database: New challenges for image quality assessment models. *IEEE Transactions on Image Processing*, 26 (2):1004–1016, 2017-02. 5

[44] David R. Martin, Charless C. Fowlkes, Doron Tal, and Jitendra Malik. A database of human segmented natural images and its application to evaluating segmentation algorithms and measuring ecological statistics. In *IEEE/CVF International Conference on Computer Vision (ICCV)*, pages 416–423, 2001. 6

[45] Yiqun Mei, Yuchen Fan, and Yuqian Zhou. Image super-resolution with non-local sparse attention. In *IEEE/CVF Conference on Computer Vision and Pattern Recognition (CVPR)*, pages 3517–3526, 2021. 2

[46] Seungjun Nah, Tae Hyun Kim, and Kyoung Mu Lee. Deep multi-scale convolutional neural network for dynamic scene deblurring. In *IEEE/CVF Conference on Computer Vision and Pattern Recognition (CVPR)*, pages 257–265, 2017. 6, 7

[47] Ozan Özdenizci and Robert Legenstein. Restoring vision in adverse weather conditions with patch-based denoising diffusion models. *IEEE Trans. Pattern Anal. Mach. Intell.*, 45 (8):10346–10357, 2023. 7, 8

[48] Vaishnav Potlapalli, Syed Waqas Zamir, Salman H. Khan, and Fahad Shahbaz Khan. Promptir: Prompting for all-in-one image restoration. In *Advances in Neural Information Processing Systems (NeurIPS)*, 2023. 5, 6, 7, 8

[49] Rui Qian, Robby T. Tan, Wenhan Yang, Jiajun Su, and Jiaying Liu. Attentive generative adversarial network for raindrop removal from a single image. In *Proceedings of the IEEE Conference on Computer Vision and Pattern Recognition (CVPR)*, pages 2482–2491, 2018. 7, 8

[50] S. W. Zamir, A. Arora, S. Khan, M. Hayat, F. S. Khan, M.-H. Yang, and L. Shao. Learning enriched features for fast image restoration and enhancement. *IEEE Trans. Pattern Anal. Mach. Intell.*, 45(2):1934–1948, 2022. 6

[51] Yuda Song, Zhuqing He, Hui Qian, and Xin Du. Vision transformers for single image dehazing. *IEEE Trans. Image Process.*, 32:1927–1941, 2023. 2

[52] Shangquan Sun, Wenqi Ren, Xinwei Gao, Rui Wang, and Xiaochun Cao. Restoring images in adverse weather conditions via histogram transformer. In *European Conference on Computer Vision (ECCV)*, pages 111–129, 2024. 7

[53] Fu-Jen Tsai, Yan-Tsung Peng, Yen-Yu Lin, Chung-Chi Tsai, and Chia-Wen Lin. Stripformer: Strip transformer for fast image deblurring. In *European Conference on Computer Vision (ECCV)*, pages 146–162, 2022. 2

[54] Jeya Maria Jose Valanarasu, Rajeev Yasarla, and Vishal M. Patel. Transweather: Transformer-based restoration of images degraded by adverse weather conditions. In *IEEE/CVF Conference on Computer Vision and Pattern Recognition (CVPR)*, pages 2343–2353, 2022. 6, 7, 8

[55] Tianyu Wang, Xin Yang, Ke Xu, Shaozhe Chen, Qiang Zhang, and Rynson W. H. Lau. Spatial attentive single-image deraining with a high quality real rain dataset. In *IEEE/CVF Conference on Computer Vision and Pattern Recognition (CVPR)*, pages 12270–12279, 2019. 2, 7, 8

[56] Wenhai Wang, Enze Xie, Xiang Li, Deng-Ping Fan, Kaitao Song, Ding Liang, Tong Lu, Ping Luo, and Ling Shao. Pyramid vision transformer: A versatile backbone for dense prediction without convolutions. In *Proceedings of the IEEE/CVF International Conference on Computer Vision (ICCV)*, pages 568–578, 2021. 3

[57] Zhendong Wang, Xiaodong Cun, Jianmin Bao, Wengang Zhou, Jianzhuang Liu, and Houqiang Li. Uformer: A general u-shaped transformer for image restoration. In *IEEE/CVF Conference on Computer Vision and Pattern Recognition (CVPR)*, pages 17662–17672, 2022. 2, 5, 8

[58] Chen Wei, Wenjing Wang, Wenhan Yang, and Jiaying Liu. Deep retinex decomposition for low-light enhancement. In *BMVC*, page 155, 2018. 6, 7

[59] Jie Xiao, Xueyang Fu, Aiping Liu, Feng Wu, and Zheng-Jun Zha. Image de-raining transformer. *IEEE Trans. Pattern Anal. Mach. Intell.*, 45(11):12978–12995, 2023. 2, 7, 8

[60] Wenhan Yang, Robby T Tan, Jiashi Feng, Jiaying Liu, Zongming Guo, and Shuicheng Yan. Deep joint rain detection and removal from a single image. In *IEEE/CVF Conference on Computer Vision and Pattern Recognition (CVPR)*, pages 1357–1366, 2017. 8

[61] Wenhan Yang, Robby T. Tan, Jiashi Feng, Jiaying Liu, Zongming Guo, and Shuicheng Yan. Deep joint rain detection and removal from a single image. In *IEEE/CVF Conference on Computer Vision and Pattern Recognition (CVPR)*, pages 1685–1694, 2017. 5, 6

[62] Mingde Yao, Ruikang Xu, Yuanshen Guan, Jie Huang, and Zhiwei Xiong. Neural degradation representation learning for all-in-one image restoration. *IEEE Trans. Image Process.*, 33:5408–5423, 2024. 5, 6

[63] Rajeev Yasarla and Vishal M Patel. Uncertainty guided multi-scale residual learning-using a cycle spinning cnn for single image de-raining. In *Proceedings of the IEEE/CVF Conference on Computer Vision and Pattern Recognition (CVPR)*, pages 8405–8414, 2019. 8

[64] Tian Ye, Sixiang Chen, Jinbin Bai, Jun Shi, Chenghao Xue, Jingxia Jiang, Junjie Yin, Erkang Chen, and Yun Liu. Adverse weather removal with codebook priors. In *IEEE/CVF International Conference on Computer Vision (ICCV)*, pages 12619–12630, 2023. 7

[65] Tian Ye, Sixiang Chen, Wenhao Chai, Zhaohu Xing, Jing Qin, Ge Lin, and Lei Zhu. Learning diffusion texture priors for image restoration. In *IEEE/CVF Conference on Computer Vision and Pattern Recognition (CVPR)*, pages 2524–2534, 2024. 7, 8

[66] Tian Ye, Sixiang Chen, Wenhao Chai, Zhaohu Xing, Jing Qin, Ge Lin, and Lei Zhu. Learning diffusion texture priors for image restoration. In *IEEE/CVF Conference on Computer Vision and Pattern Recognition (CVPR)*, pages 2524–2534, 2024. 5, 6, 7

[67] Qiaosi Yi, Juncheng Li, Qinyan Dai, Faming Fang, Guixu Zhang, and Tieyong Zeng. Structure-preserving deraining with residue channel prior guidance. In *IEEE/CVF International Conference on Computer Vision (ICCV)*, pages 4238–4247, 2021. 8

[68] Syed Waqas Zamir, Aditya Arora, Salman H. Khan, Munawar Hayat, Fahad Shahbaz Khan, Ming-Hsuan Yang, and Ling Shao. Multi-stage progressive image restoration. In *IEEE/CVF Conference on Computer Vision and Pattern Recognition (CVPR)*, pages 14821–14831, 2021. 5, 6, 7, 8

[69] Syed Waqas Zamir, Aditya Arora, Salman Khan, Munawar Hayat, Fahad Shahbaz Khan, and Ming-Hsuan Yang. Restormer: Efficient transformer for high-resolution image restoration. In *IEEE/CVF Conference on Computer Vision and Pattern Recognition (CVPR)*, pages 5718–5729, 2022. 5, 6, 7, 8

[70] Jinghao Zhang, Jie Huang, Mingde Yao, Zizheng Yang, Hu Yu, Man Zhou, and Feng Zhao. Ingredient-oriented multi-degradation learning for image restoration. In *IEEE/CVF Conference on Computer Vision and Pattern Recognition (CVPR)*, pages 5825–5835, 2023. 6, 7

[71] Jiale Zhang, Yulun Zhang, Jinjin Gu, Yongbing Zhang, Linghe Kong, and Xin Yuan. Accurate image restoration with attention retractable transformer. In *Proceedings of International Conference on Learning Representations (ICLR)*, 2023. 2

[72] Kai Zhang, Wangmeng Zuo, Yunjin Chen, Deyu Meng, and Lei Zhang. Beyond a gaussian denoiser: Residual learning of deep cnn for image denoising. *IEEE Trans. Image Process.*, 26(7):3142–3155, 2017. 2

[73] Xu Zhang, Jiaqi Ma, Guoli Wang, Qian Zhang, Huan Zhang, and Lefei Zhang. Perceive-ir: Learning to perceive degradation better for all-in-one image restoration, 2024. 6, 8

[74] Yulun Zhang, Kunpeng Li, Kai Li, Lichen Wang, Bineng Zhong, and Yun Fu. Image super-resolution using very deep residual channel attention networks. In *European Conference on Computer Vision (ECCV)*, pages 294–310, 2018. 2

[75] Yulun Zhang, Yapeng Tian, Yu Kong, Bineng Zhong, and Yun Fu. Residual dense network for image super-resolution. In *Proceedings of the IEEE Conference on Computer Vision and Pattern Recognition (CVPR)*, pages 2472–2481, 2018. 2

[76] Shangchen Zhou, Jiawei Zhang, Wangmeng Zuo, and Chen Change Loy. Cross-scale internal graph neural network

for image super-resolution. In *Advances in Neural Information Processing Systems (NeurIPS)*, 2020. 2

[77] Yurui Zhu, Tianyu Wang, Xueyang Fu, Xuanyu Yang, Xin Guo, Jifeng Dai, Yu Qiao, and Xiaowei Hu. Learning weather-general and weather-specific features for image restoration under multiple adverse weather conditions. In *IEEE/CVF Conference on Computer Vision and Pattern Recognition (CVPR)*, pages 21747–21758, 2023. 7

[78] Yurui Zhu, Tianyu Wang, Xueyang Fu, Xuanyu Yang, Xin Guo, Jifeng Dai, Yu Qiao, and Xiaowei Hu. Learning weather-general and weather-specific features for image restoration under multiple adverse weather conditions. In *Proceedings of the IEEE Conference on Computer Vision and Pattern Recognition (CVPR)*, pages 21747–21758, 2023. 5, 7, 8